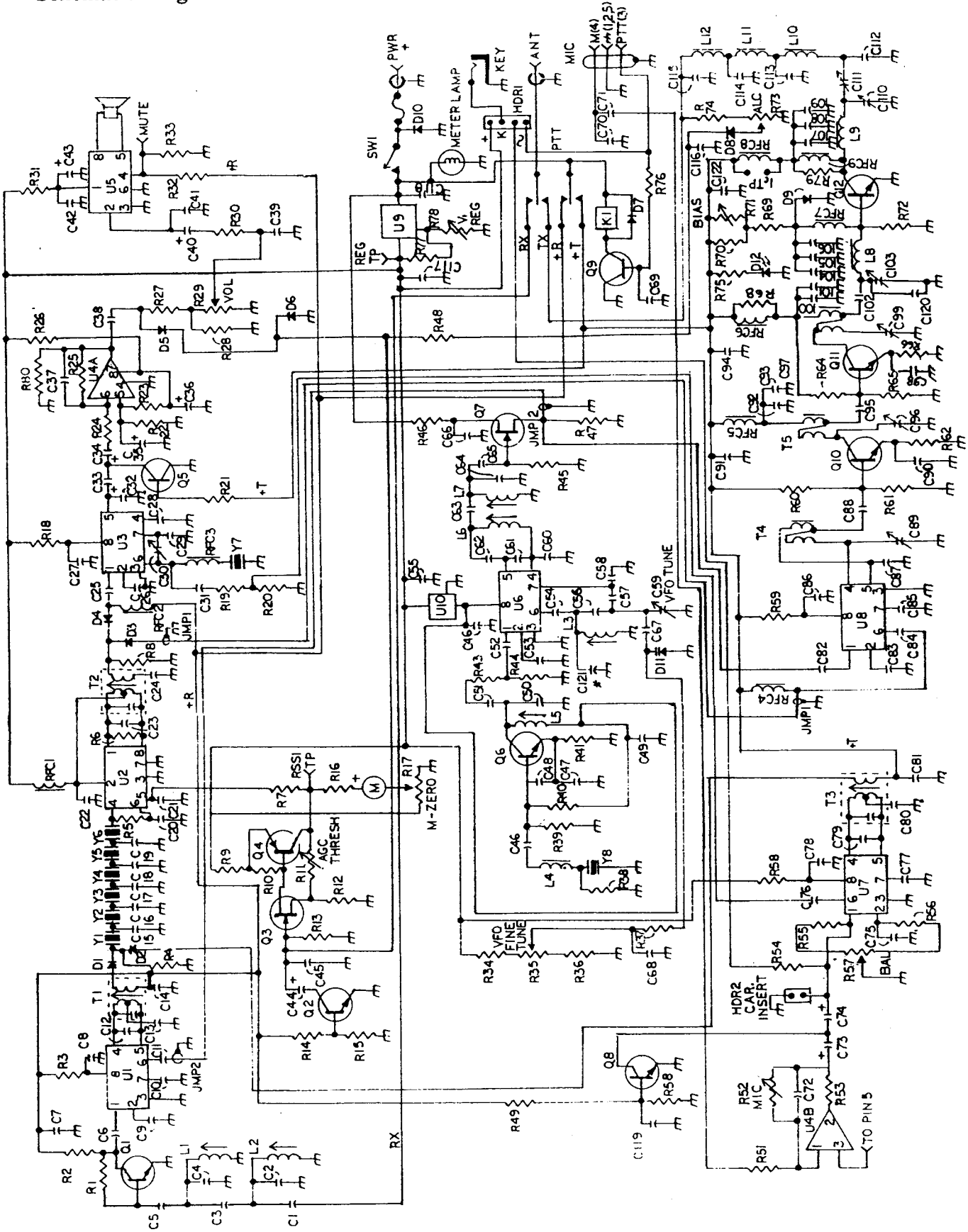Schematic Diagram -- MFJ-9406: